ÑIEÀU CHEÁ – GIAÛI ÑIEÀU CHEÁ

- Ñieàu cheá bieân ñoä: AM, DSB, SSB
- Ñieàu cheá goùc: FM, PM

Giôùi thieäu

- Lyù do caàn phaûi ñieàu cheá tín hieäu khi truyeàn tin töùc:
  - Bieán ñoåi tín hieäu tin töùc phuø hôïp vôùi keânh truyeàn (veà : baêng thoâng, nhieãu, möùc ñoä suy hao)
  - Söû duïng hieäu quaû keânh truyeàn.
  - Taêng khaû naêng choáng nhieãu cho tin töùc.
- Caùc loaïi ñieàu cheá:

  - Ñieàu cheá lieân tuïc: bieân ñoä, goùc

  - Ñieàu cheá xung: PAM, PWM, PPM; PCM, Delta
- Thöïc hieän vieäc ñieàu cheá lieân tuïc:
  - Laøm bieán ñoåi moät trong caùc thoâng soá cuûa soùng mang (bieân ñoä, goùc pha) theo tín hieäu tin

Nhôø ñieàu cheá maø ñaõ phaân taùch ñöôïc 2 tin töùc coù phoå choàng laáp nhau:

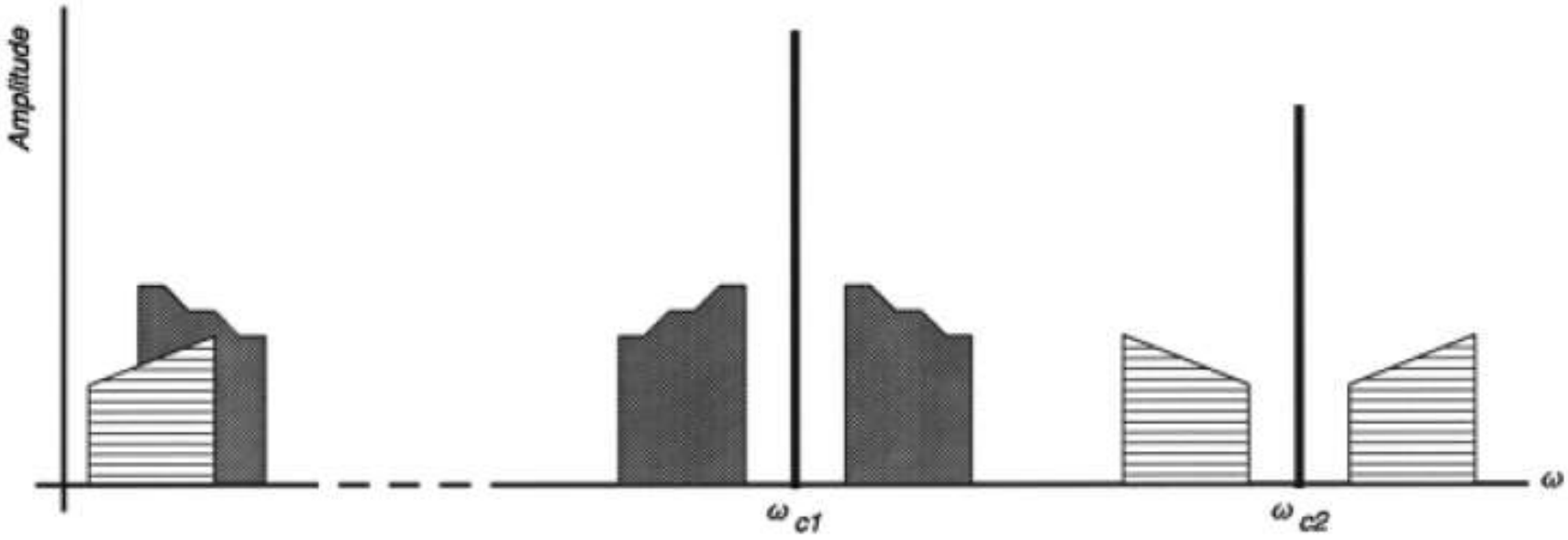

Khaûo saùt phaàn töû diode:

$$i_d = I_s(e^{\alpha v_d} - 1) \qquad \alpha = \frac{q}{nkT}$$

Xem aùp treân diode goàm 2 thaønh phaàn DC vaø AC:

$$v_d = V_b + v_{ac}$$

$$i_d = I_s(e^{\alpha(V_b + v_{ac})} - 1) = I_s(e^{\alpha V_b} e^{\alpha v_{ac}} - 1)$$

Giaû söû: $v_{ac} \ll V_b$

$$i_d = I_s\left[e^{\alpha V_b} \cdot \left\{1 + \alpha v_{ac} + \frac{(\alpha v_{ac})^2}{2} + \cdots\right\} - 1\right]$$

$$i_d = I_s(e^{\alpha V_b} - 1) + I_s e^{\alpha V_b}\left\{\alpha v_{ac} + \frac{(\alpha v_{ac})^2}{2} + \cdots\right\} = I_b + i_{ac}$$

Thaønh phaàn AC:

$$i_{ac} \approx I_s e^{\alpha V_b}\left\{\alpha v_{ac} + \frac{(\alpha v_{ac})^2}{2}\right\} = g_d v_{ac} + g_d' \frac{v_{ac}^2}{2}$$

Ñieän daãn ñoäng:

$$g_d = \alpha I_s e^{\alpha V_b} \qquad g_d' = \alpha g_d$$

ÑIEÀU CHEÁ VAØ GIAÛI ÑIEÀU CHEÁ BIEÂN ÑOÄ: AM, DSB, SSB

Ñieàu bieân AM:

Soùng mang: $c(t) = A\sin\omega_C t$

Tin töùc: $f(t) = \cos\omega_m t$

Tín hieäu AM: $S(t) = A[1 + mf(t)]\sin\omega_c t$

$$S(t) = A\left\{\sin\omega_c t + \frac{m}{2}[\sin(\omega_c + \omega_m)t + \sin(\omega_c - \omega_m)t]\right\}$$

Heä soá ñieàu cheá: m

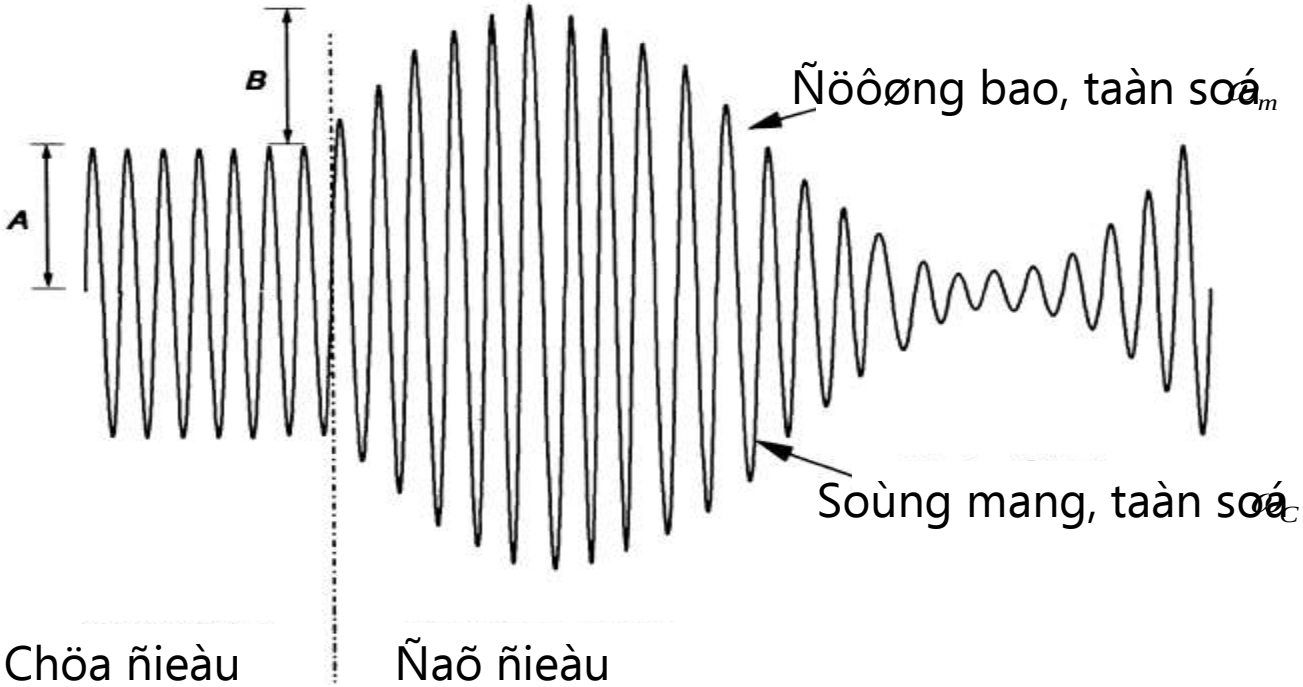
B
A
Ñöôøng bao, taàn soá ω_m
Soùng mang, taàn soá ω_C
Chöa ñieàu cheá
Ñaõ ñieàu cheá

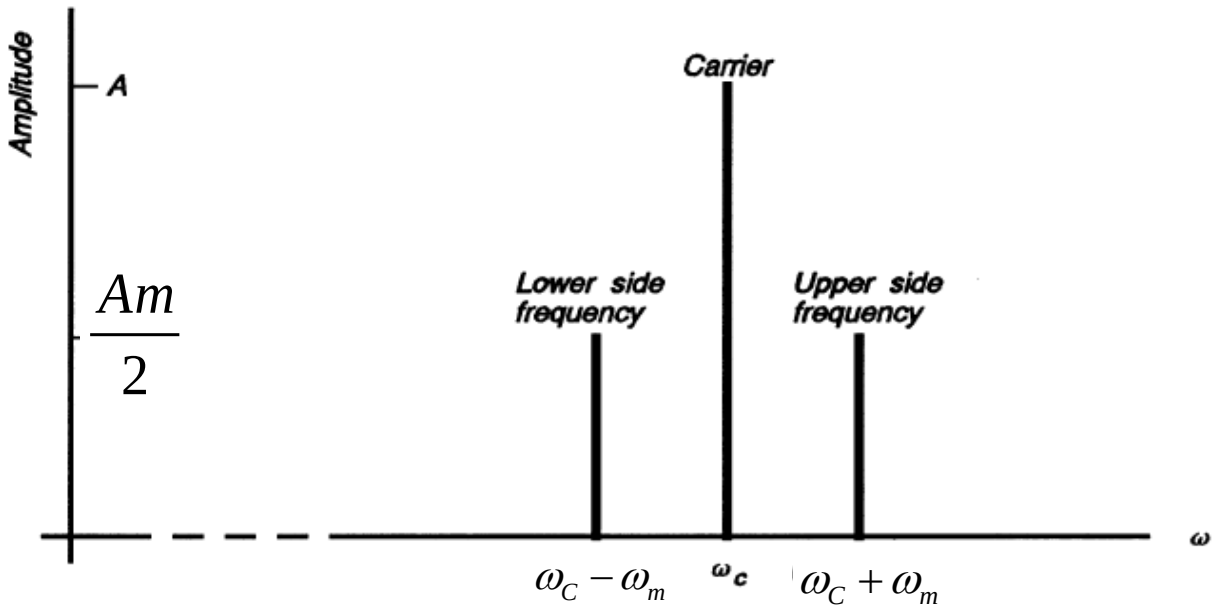
Amplitude
A
$\frac{Am}{2}$
Carrier
Lower side frequency
Upper side frequency
ω
$\omega_C - \omega_m$
ω_c
$\omega_C + \omega_m$

Khi tín hieäu Tin töùc coù nhieàu thaønh phaàn taàn soá:

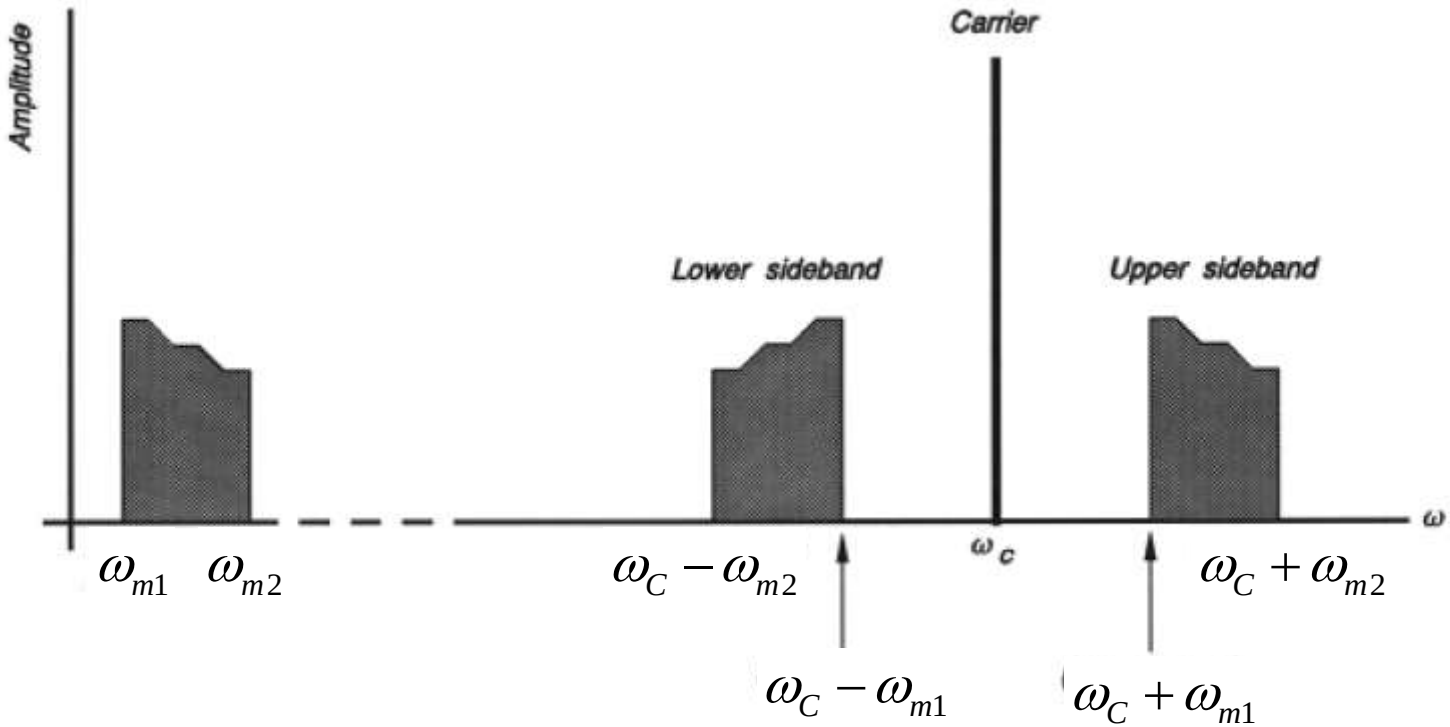

Sô ñoà khoái cuûa moät maùy phaùt AM tieâu bieåu:

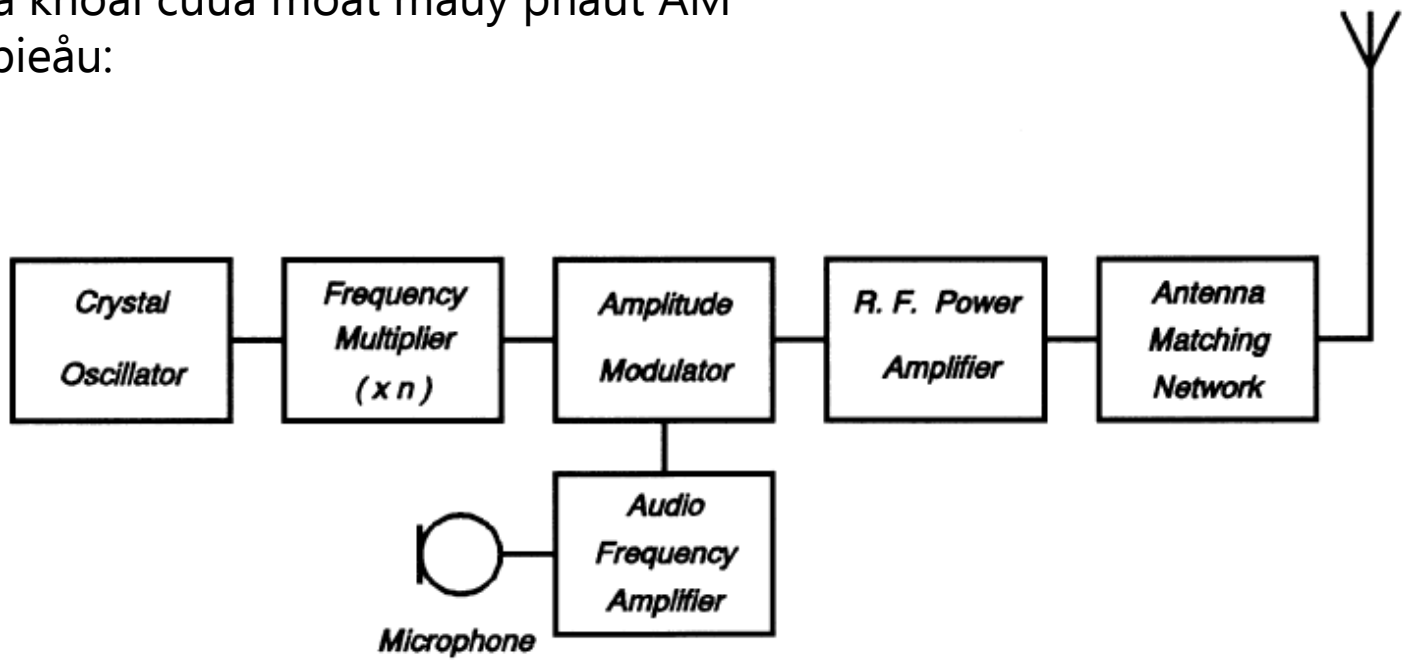

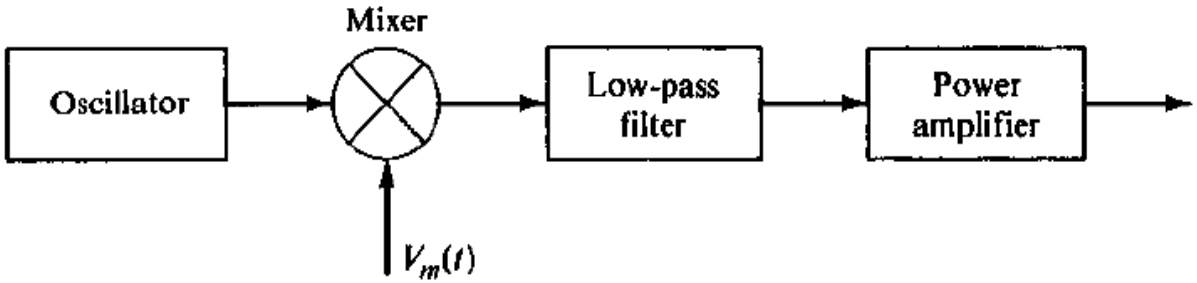

Ñieàu cheá ôû möùc tín hieäu bieân ñoä thaáp

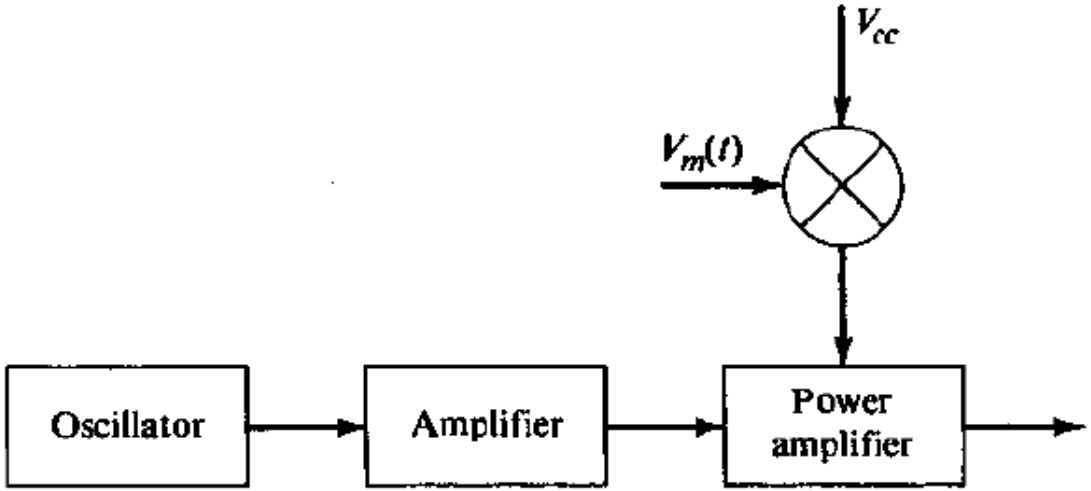

Ñieàu cheá ôû möùc coâng suaát cao

Maïch Ñieàu cheá AM duøng diode:

Tin töùc: $v_s = V_s \cos \omega_s t$

Soùng mang: $v_c = V_c \cos \omega_c t$

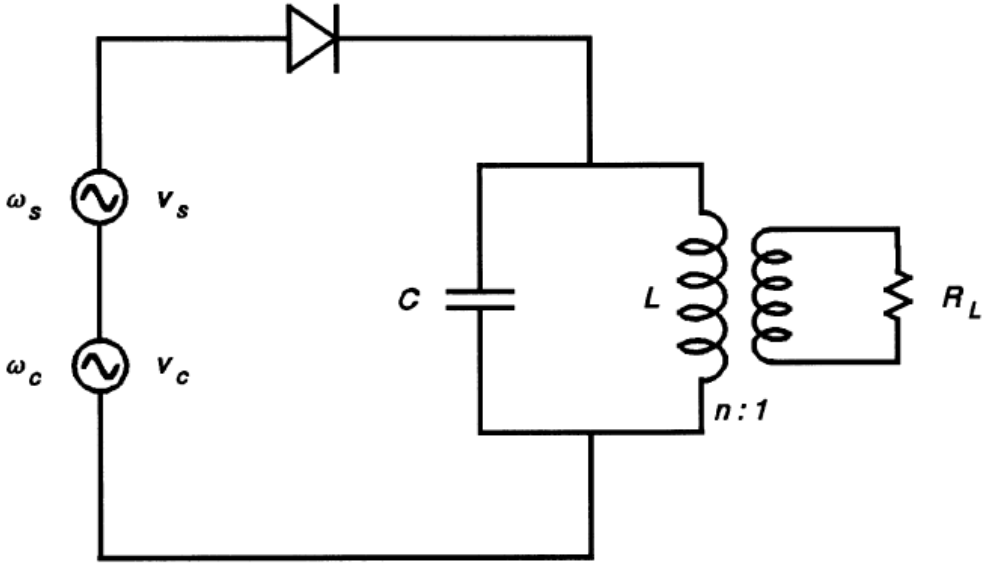

Xem aùp treân diode: (*)

$$v = V_c \cos \omega_c t + V_s \cos \omega_s t.$$

Thaønh phaàn xoay chieàu qua diode:

$$i = a_1 v + a_2 v^2 + \cdots.$$

$$i = a_1 V_c \cos \omega_c t + a_1 V_s \cos \omega_s t + a_2 V_c^2 \cos^2 \omega_c t + 2a_2 V_c V_s \cos \omega_c t \cos \omega_s t + a_2 V_s^2 \cos^2 \omega_s t + \cdots.$$

$$i = a_1 V_c \cos \omega_c t + a_1 V_s \cos \omega_s t + \frac{a_2 V_c^2}{2}(1 + \cos 2\omega_c t) + 2a_2 V_c V_s \cos \omega_c t \cos \omega_s t + \frac{a_2 V_s^2}{2}(1 + \cos 2\omega_s t)$$

$$i = a_1 V_c \cos\omega_c t + a_1 V_s \cos\omega_s t + \frac{a_2 V_c^2}{2}(1+\cos 2\omega_c t) + 2a_2 V_c V_s \cos\omega_c t \cos\omega_s t$$

$$+ \frac{a_2 V_s^2}{2}(1+\cos 2\omega_s t)$$

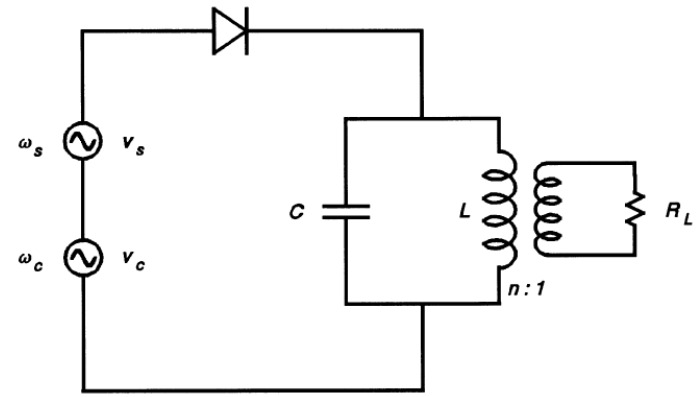

Giaû söû: $\omega_c \gg \omega_s$

LC taïo thaønh boä loïc thoâng daûi quanh taàn soá ω_c

Chæ coøn laïi caùc thaønh phaàn naøy coù theå qua ñöôïc bieán aùp

$$a_1 V_c \cos\omega_c t + 2a_2 V_c V_s \cos\omega_c t \cos\omega_s t.$$

AÙp treân taûi R_L:

$$v_p = a_1 n^2 R_L V_c \left(1 + \frac{2a_2 V_s}{a_1}\cos\omega_s t\right)\cos\omega_c t.$$

Heä soá ñieàu cheá $k = \dfrac{2a_2 V_s}{a_1}$ $\qquad A = a_1 n^2 R_L V_c.$

Vaäy aùp ra taûi: $v_p = A(1 + k\cos\omega_s t)\cos\omega_c t.$

Maïch Ñieàu cheá AM tröïc tieáp treân cöïc C:

$$V = V_{cc} + V_m(t)$$

$$= V_{cc}(1 + m\cos\omega_m t)$$

$$V_m(t) = mV_{cc}\cos\omega_m t$$

$$V_o = V_{cc}(1 + m\cos\omega_m t)\cos\omega_c t$$

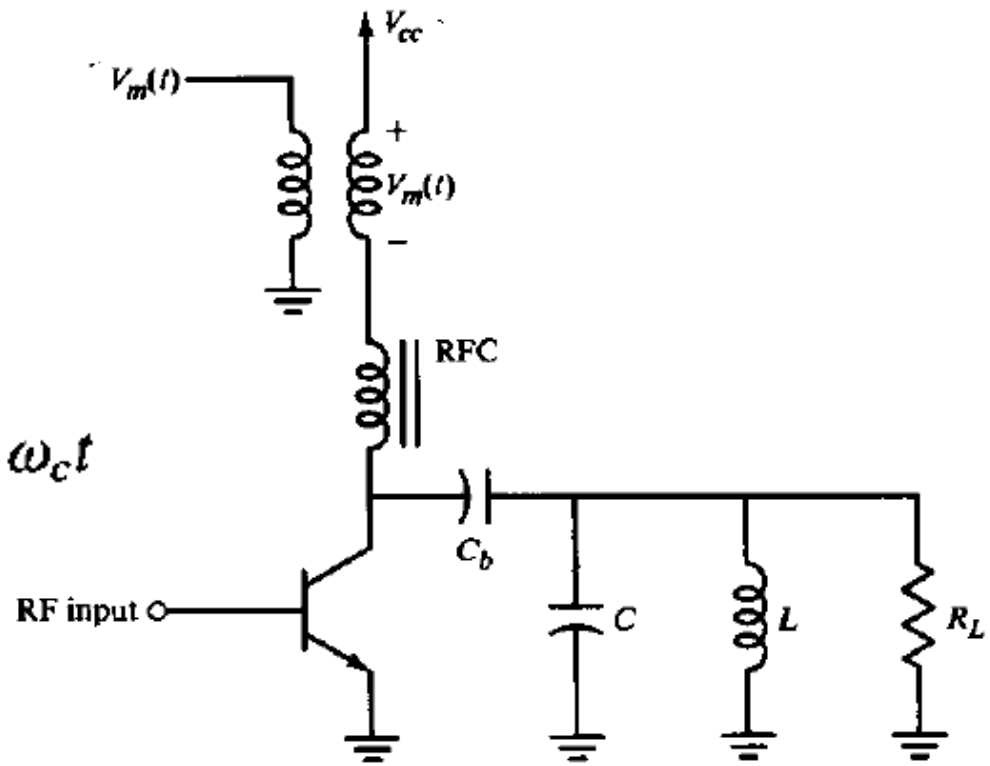

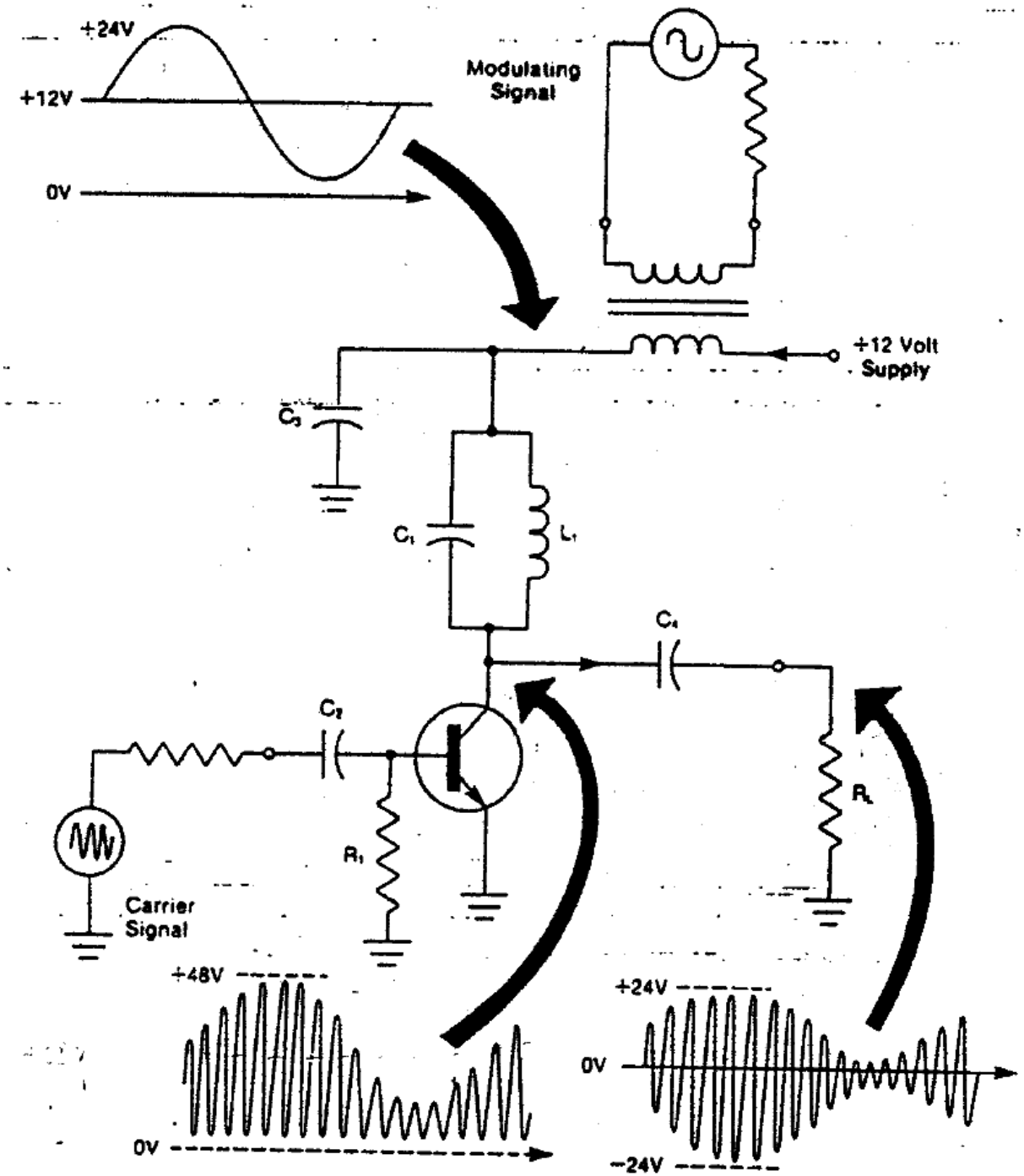
+24V
+12V
0V
Modulating Signal
+12 Volt Supply
C3
C1
L1
C4
C2
RL
R1
Carrier Signal
+48V
0V
+24V
0V
-24V

Mixer (troän taàn)

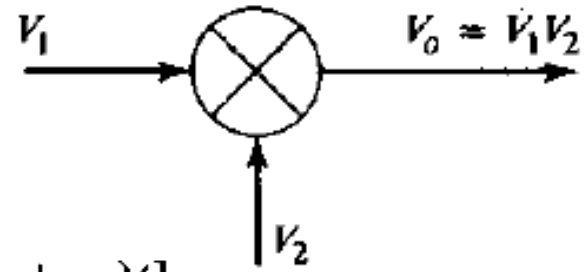

$$V_o = (A_1 \sin \omega_1 t)(A_2 \sin \omega_2 t) = \frac{A_1 A_2}{2}[\cos(\omega_1 - \omega_2)t - \cos(\omega_1 + \omega_2)t]$$

* Mixer duøng diode: (maïch 1)

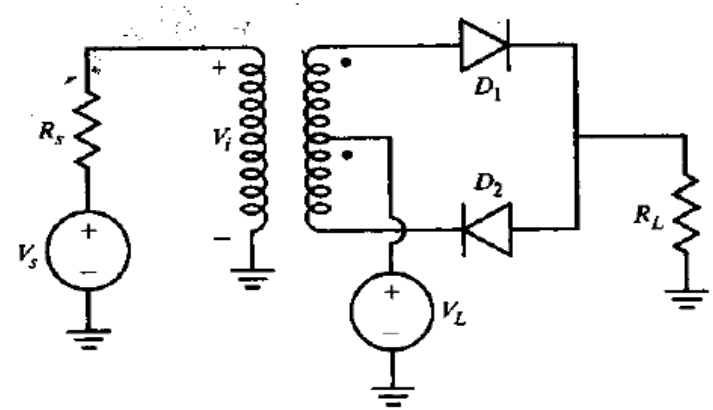

$$V_o = \begin{cases} V_i + V_L & V_L > 0 \\ -V_i + V_L & V_L < 0 \end{cases}$$

$$V_o = V_L + V_i^*$$

$$V_i^* = V_i P(t)$$

$$P(t) = \begin{cases} 1 & V_L > 0 \\ -1 & V_L < 0 \end{cases}$$

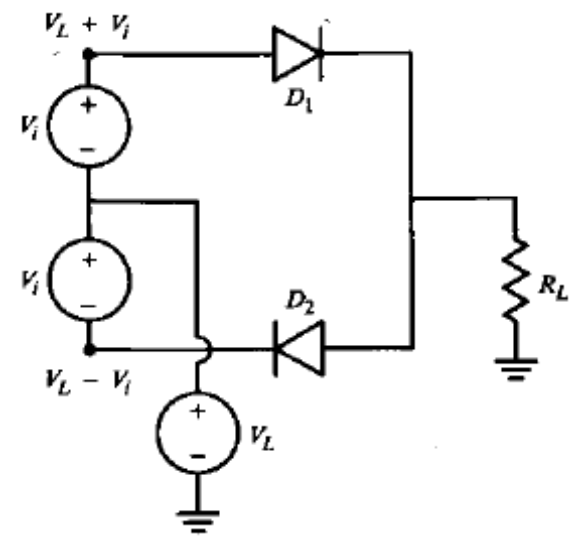

$$P(t) = \begin{cases} 1 & V_L > 0 \\ -1 & V_L < 0 \end{cases}$$

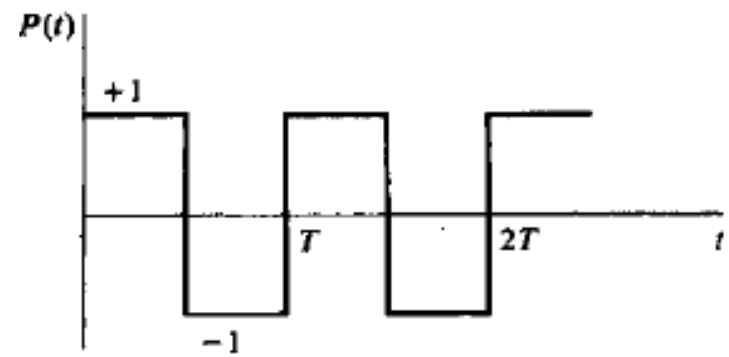

$$P(t) = \frac{4}{\pi} \sum_{n=0}^{\infty} \frac{\sin[(2n+1)\omega_L t]}{2n+1}$$

$$V_i^* = V_i \left[\frac{4}{\pi} \sum_{n=0}^{\infty} \frac{\sin(2n+1)\omega_L t}{2n+1} \right]$$

$$V_i = V \sin \omega_i t$$

$$V_i^* = \frac{2V}{\pi} \sum_{n=0}^{\infty} \frac{\cos\,[(2n+1)\omega_L - \omega_i]t - \cos\,[(2n+1)\omega_L + \omega_i]t}{2n+1}$$

$$V_o = V_L + V_i^*$$

* Mixer duøng diode: (maïch 2)

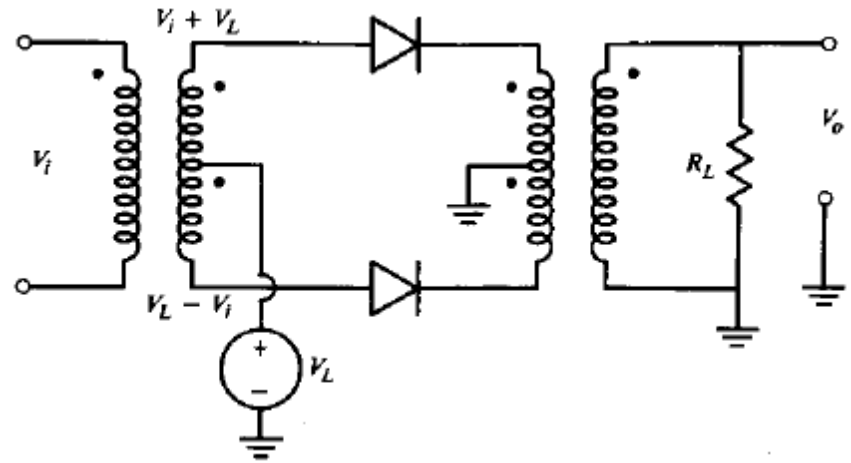

$$V_o = V_i P(t)$$

$$P(t) = \begin{cases} 1 & V_L > 0 \\ 0 & V_L \le 0 \end{cases}$$

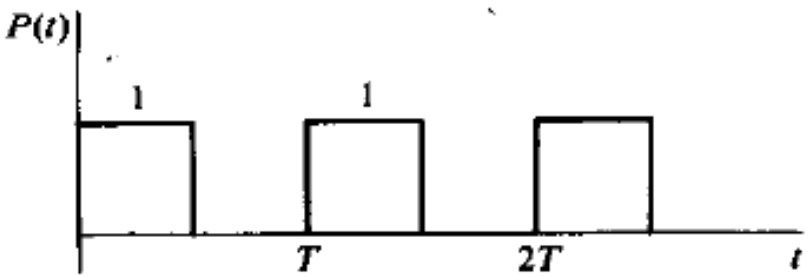

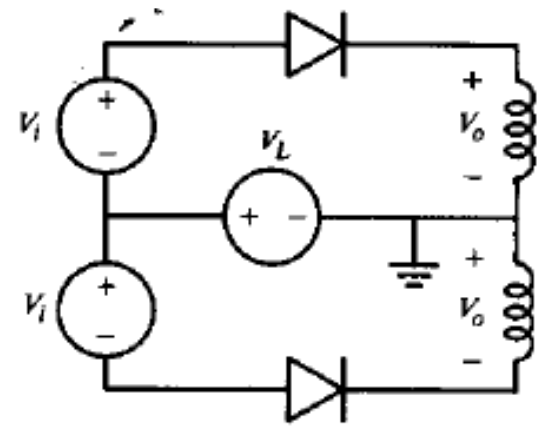

$$P(t) = \frac{1}{2} + \frac{2}{\pi} \sum_{n=0}^{\infty} \frac{\sin (2n+1)\omega_L t}{2n+1}$$

$$V_i = V \sin \omega_i t$$

$$V_o(t) = V \frac{\sin \omega_i t}{2} + \frac{V}{\pi} \sum_{n=0}^{\infty} \frac{\cos [(2n+1)\omega_L - \omega_i]t - \cos [(2n+1)\omega_L + \omega_i]t}{2n+1}$$

* Mixer duøng 4 diode: (boä ñieàu cheá caân baèng)

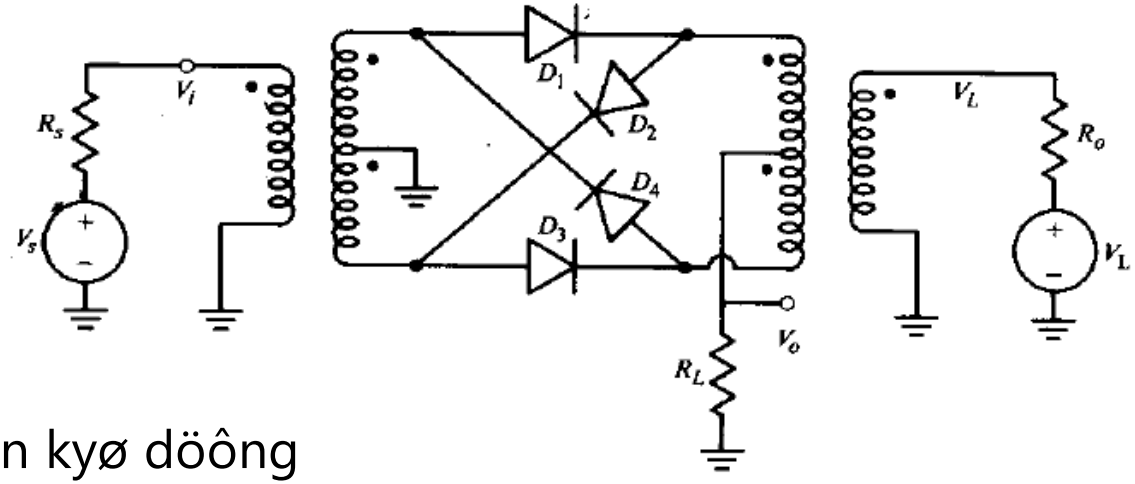

ÔÛ baùn kyø döông cuûa V_L:

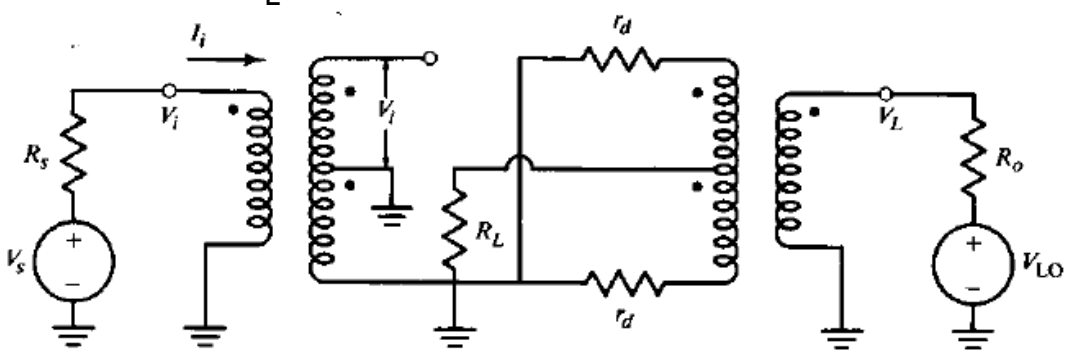

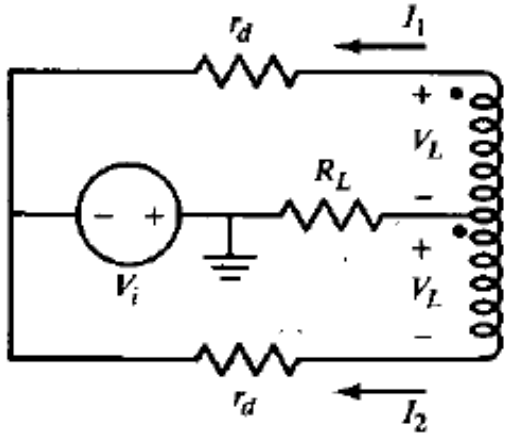

$$I_1 + I_2 = \frac{V_i}{R_L + r_d/2} = -\frac{V_o}{R_L} \qquad \frac{V_o}{V_i} = -\frac{R_L}{R_L + r_d/2}$$

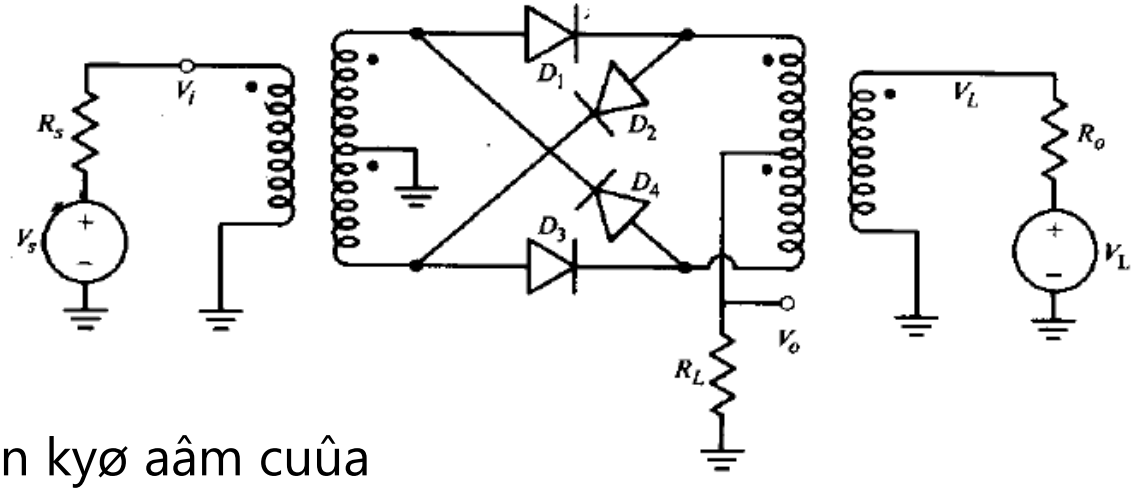

ÔÛ baùn kyø aâm cuûa V_L:

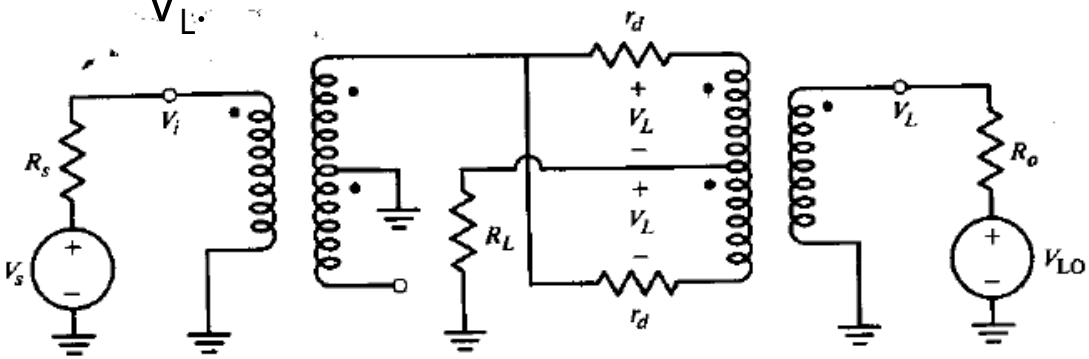

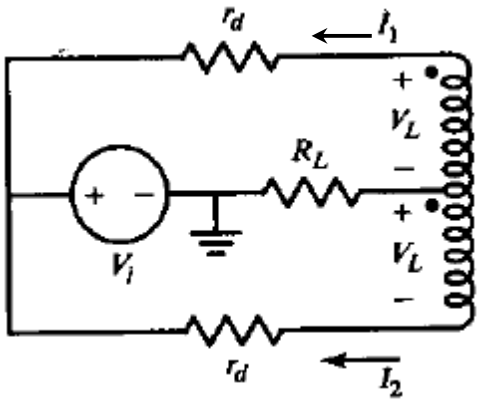

$$V_o = \frac{V_i R_L}{R_L + r_d/2}$$

$$V_i = V \sin \omega_i t$$

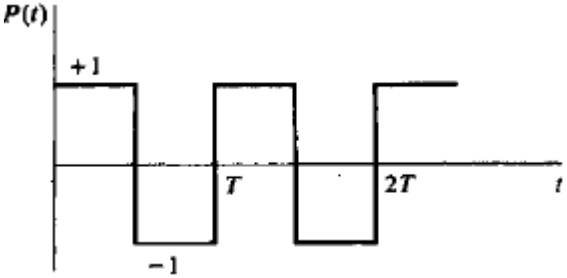

$$V_o(t) = V_i P(t) \frac{R_L}{R_L + r_d/2}$$

$$V_o(t) = \frac{R_L}{R_L + r_d/2} \left\{ \frac{2V}{\pi} \sum_{n=0}^{\infty} \frac{\cos[(2n+1)\omega_L - \omega_i]t - \cos[(2n+1)\omega_L + \omega_i]t}{2n+1} \right\}$$

Ñoä suy giaûm coâng suaát:

$$R_L \gg r_d$$

$$R_L = R_s$$

$$V_i = V_s/2$$

$$P_i = \frac{V_s^2}{4R_L}$$

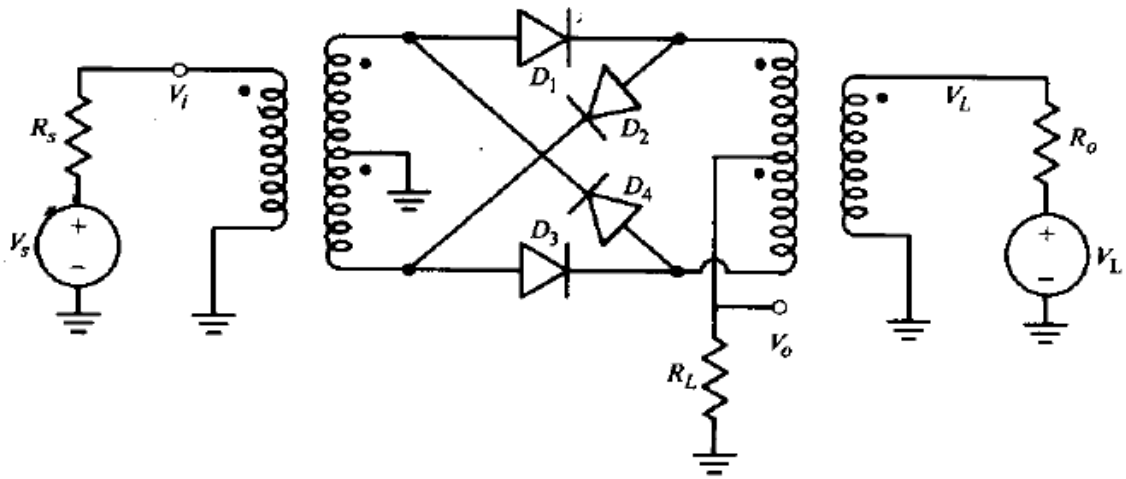

Hai bieân taàn:

$$V_o|_{\omega_L \pm \omega_i} = \frac{V_i \times 2}{\pi} = \frac{V_s}{\pi}$$

$$P_o = \frac{V_s^2}{\pi^2 R_L}$$

$$G = \frac{P_o}{P_i} = \frac{4R_L}{\pi^2 R_L} = \frac{4}{\pi^2}$$

$$L = 10 \log \frac{\pi^2}{4} \approx 4 \text{ dB}$$

Moät bieân taàn:

$$V_o|_{\omega_L + \omega_i} = \frac{V_i}{\pi} \qquad V_o = \frac{V_s}{2\pi}$$

$$G = \frac{P_o}{P_i} = (\pi^2)^{-1}$$

$$L = 10 \log \pi^2 \approx 10 \text{ dB}$$

* Mixer duøng BJT vaø FET

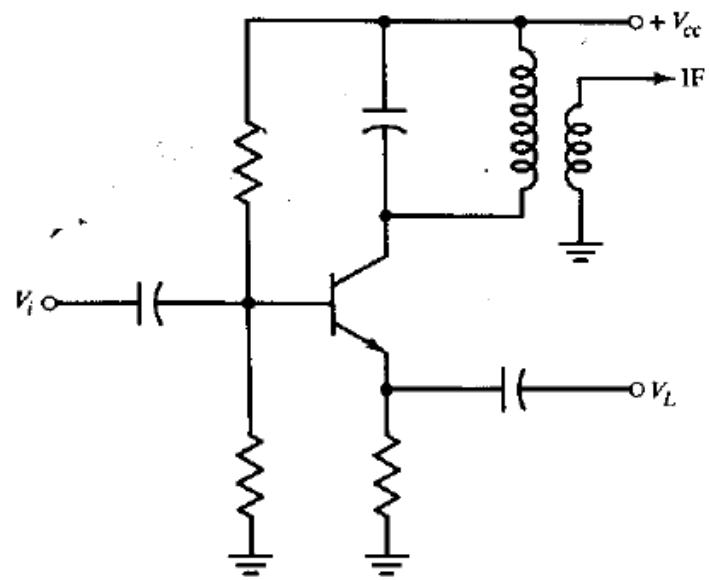

$$i_C = I_S e^{V_{be}/V_T}$$

$$V_{be} = V_{DC} + V_i - V_L$$

$$i_C = I_S e^{V_{DC}/V_T} e^{V_i/V_T} e^{-V_L/V_T}$$

$$V_i = V_1 \cos \omega_i t \qquad V_L = V_L \cos \omega_o t$$

$$i_C(t) = I_S e^{V_{DC}/V_T} [I_o(y) I_o(x) - 2 I_o(y) I_1(x) \cos \omega_o t + 2 I_1(y) I_o(x) \cos \omega_i t$$
$$- 4 I_1(y) I_1(x) \cos \omega_i t \cos \omega_o t + \text{higher-order terms}]$$

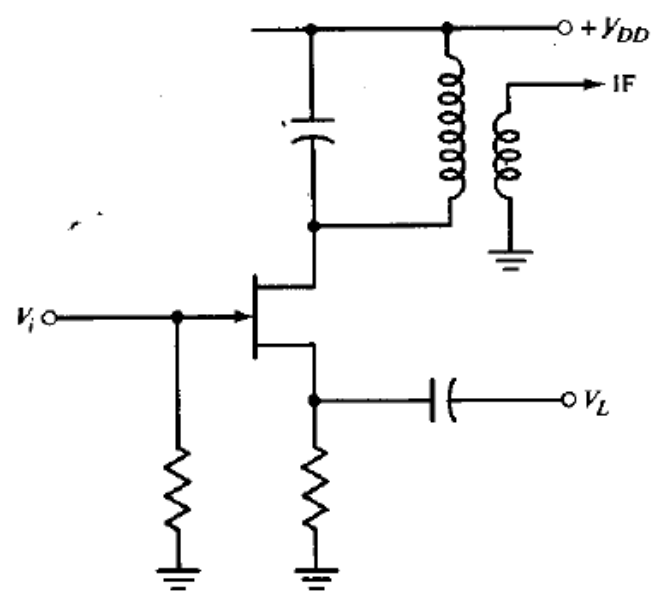

$$i_D = I_{DSS} \left(1 - \frac{V_{gs}}{V_p}\right)^2$$

$$i_D = I_{DSS} \left(1 - \frac{v_i - v_L + V_{DC}}{V_p}\right)^2$$

Ñieàu bieân DSB:

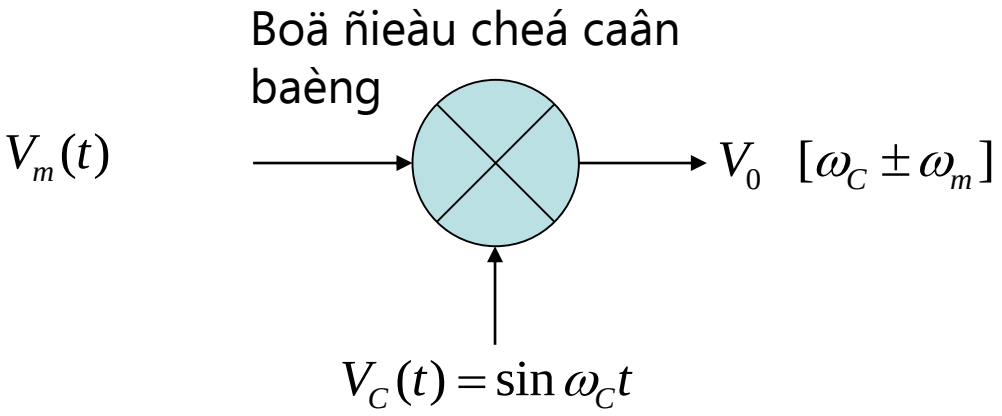

Öu ñieåm : khoâng phaùt di soùng mang -> giaûm coâng suaát

Khuyeát ñieåm: vieäc giaûi ñieàu cheá phöùc taïp

Ñieàu bieân SSB:

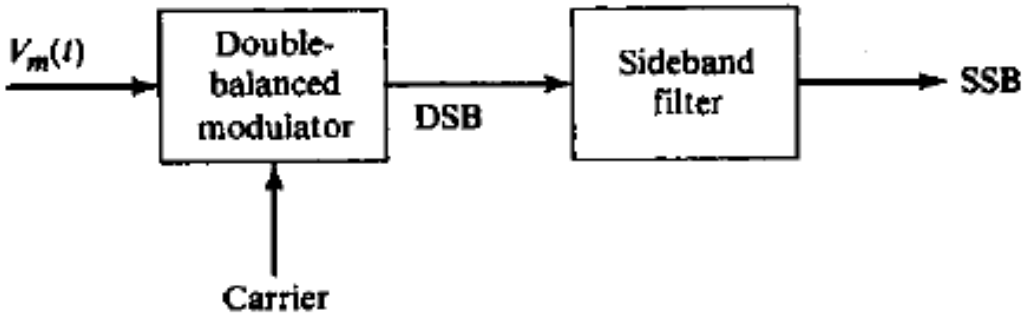

Öu ñieåm : hieäu suaát truyeàn tin cao nhaát

Tieát kieäm baêng thoâng keânh truyeàn

Khuyeát ñieåm: vieäc giaûi ñieàu cheá phöùc taïp

Giaûi ñieàu bieân AM

* Taùch soùng ñöôøng bao:

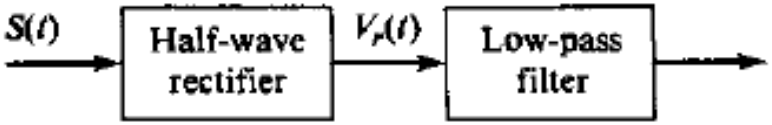

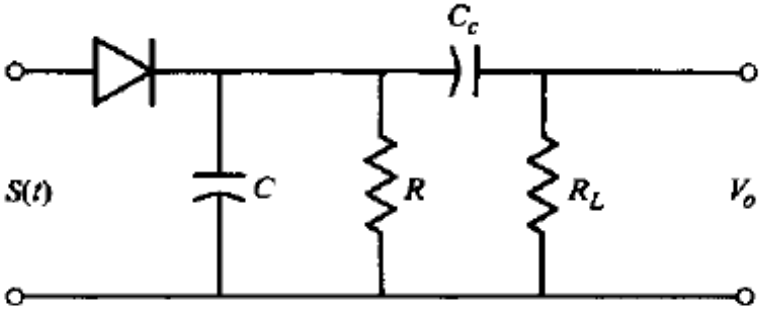

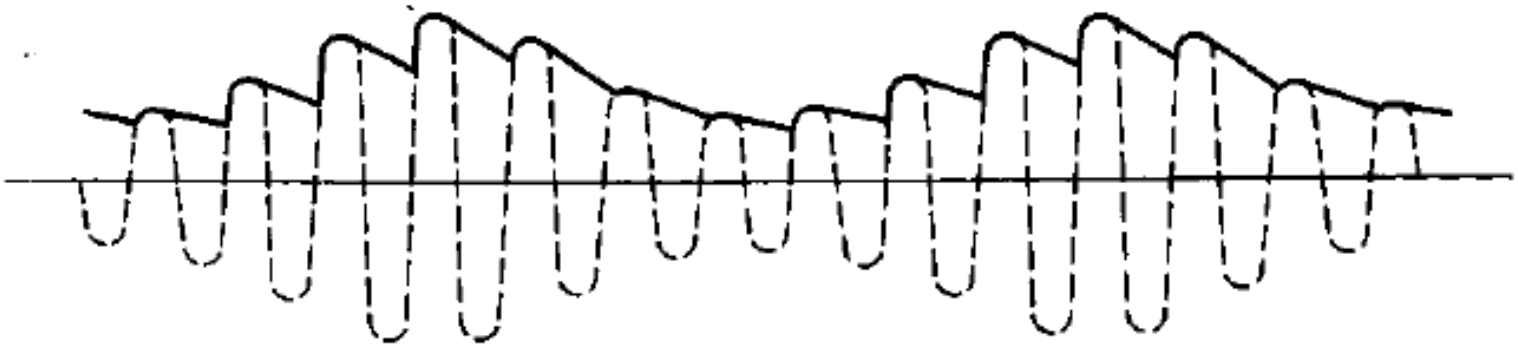

* Taùch soùng ñoàng boä

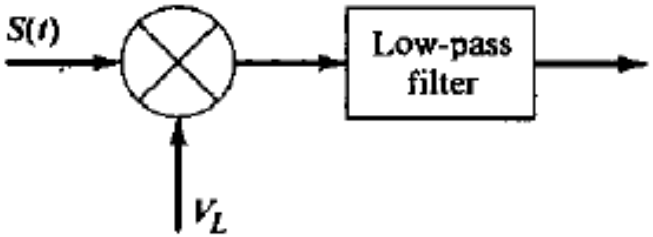

$$V_L = V \sin \omega_c t$$

$$V_o = V_L S(t)$$

$$= \frac{Am}{4} V[2 \cos \omega_m t - \cos (2\omega_c + \omega_m)t - \cos (2\omega_c - \omega_m)t]$$

$$V_o' = \frac{AVm}{2} \cos \omega_m t$$

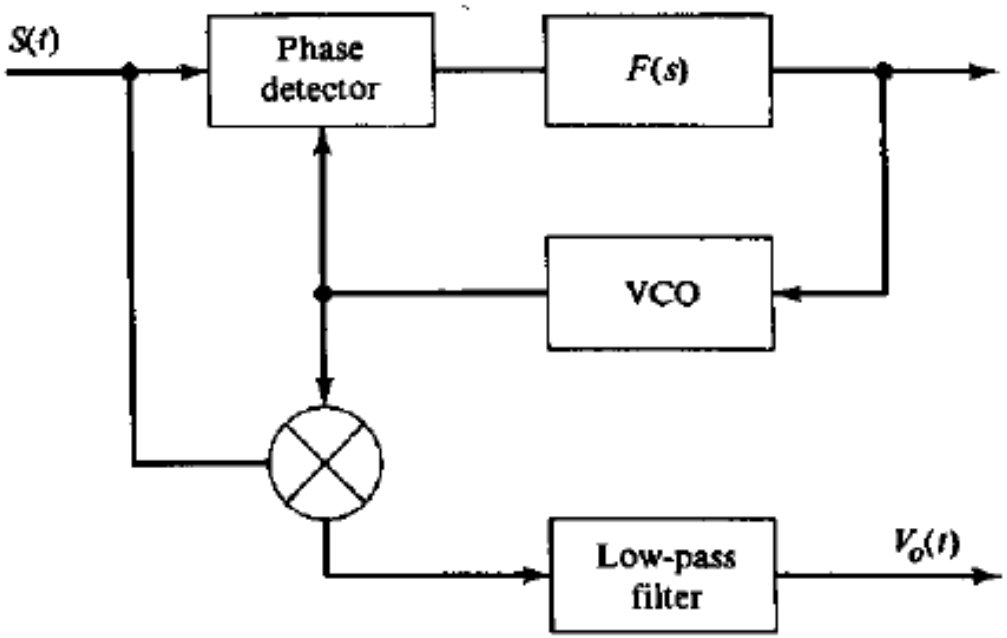

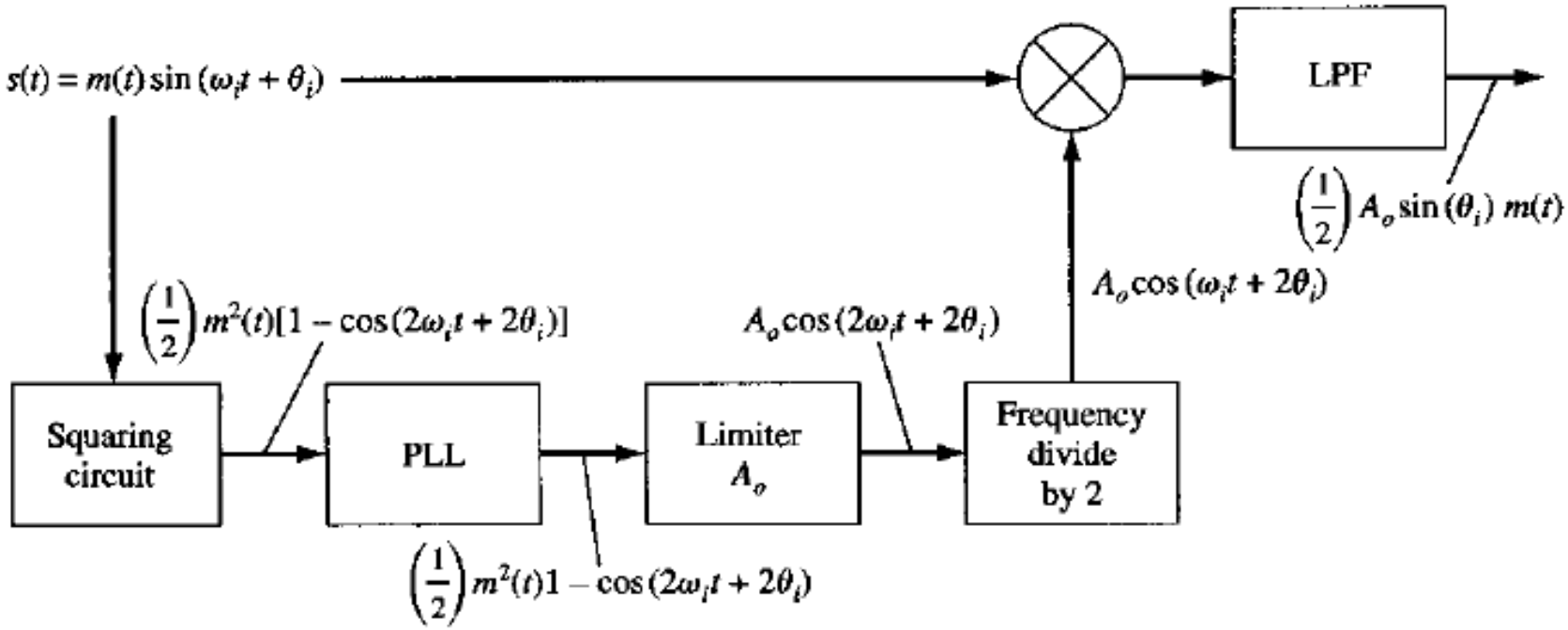

(*a*) Squaring loop

ÑIEÀU CHEÁ VAØ GIAÛI ÑIEÀU CHEÁ GÓC (FM, PM)

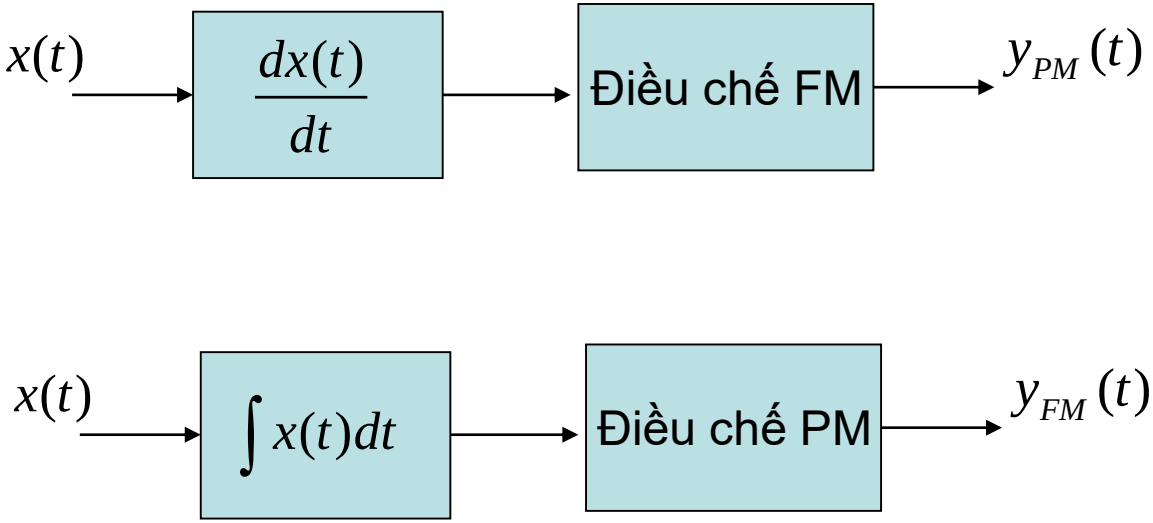

* Điều chế FM:

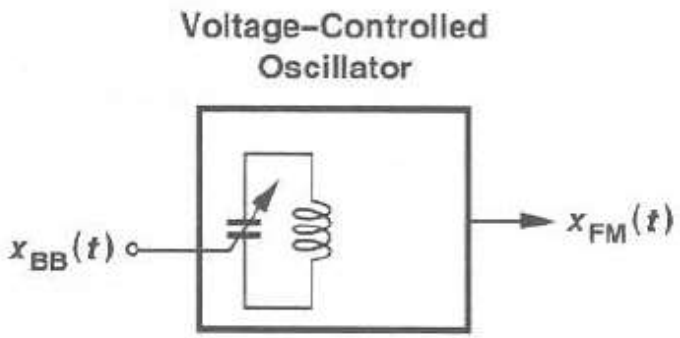

* Điều chế FM dùng VCO

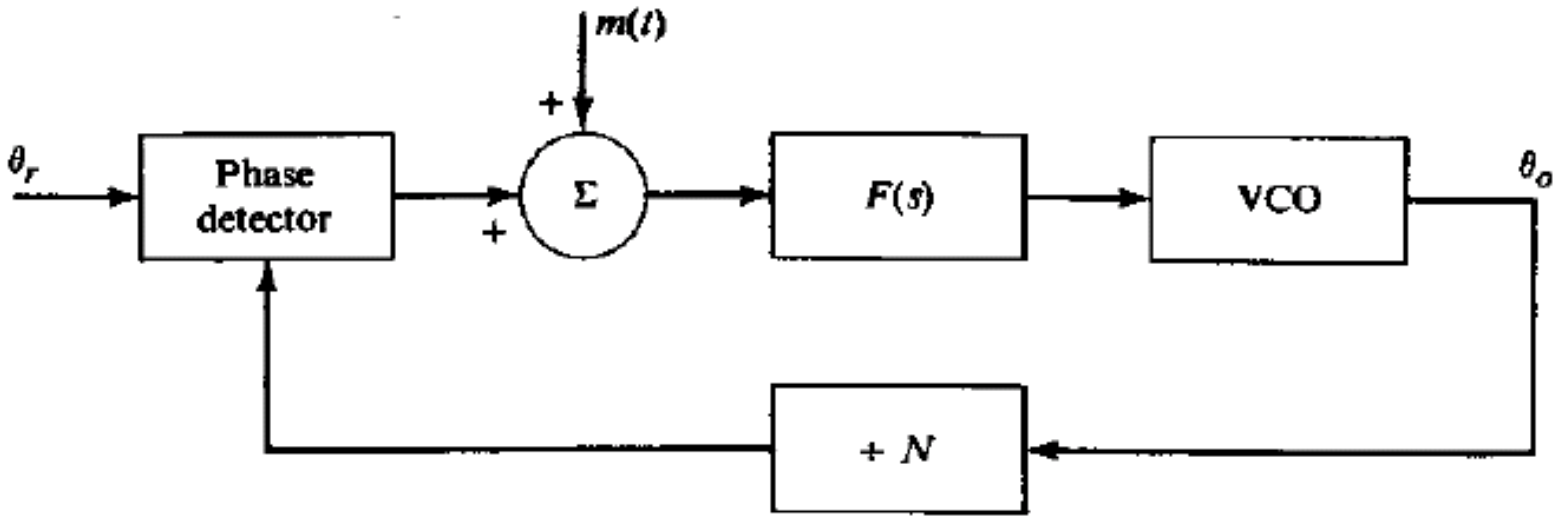

* Điều chế FM dùng PLL

* Giải Điều chế FM:

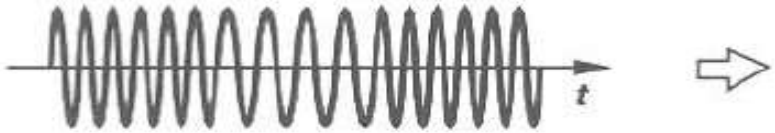

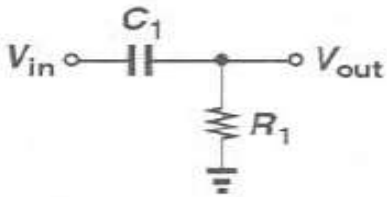

* Giải Điều chế FM bằng cách chuyển sang tín hiệu AM.

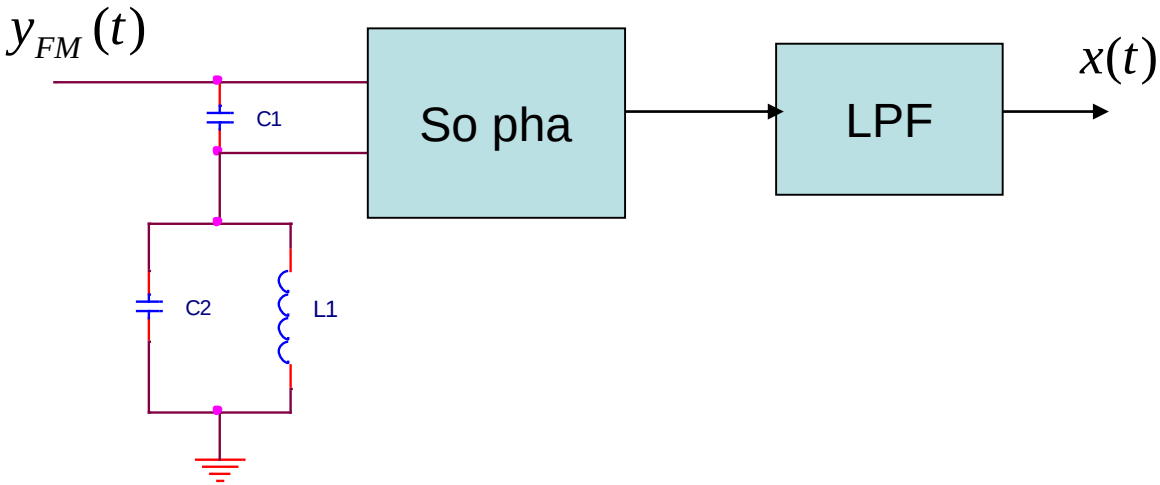

* Giải Điều chế FM bằng phương pháp cầu phương (Quadrature detector)

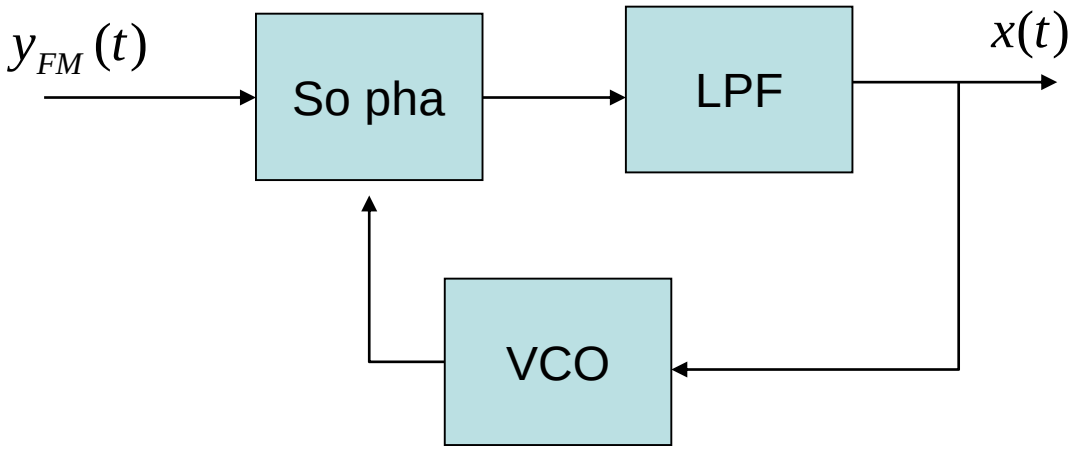

* Giải Điều chế FM bằng vòng khoá pha